Z	SYM	DA	REVISION RECORD	AUTHORITY	DRAW	CHECK
	B	10/14/91	RELEASED	G.R		
	C	6/21/92	ECO 2365	LK		

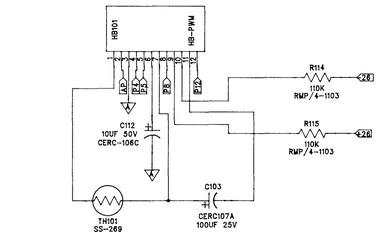

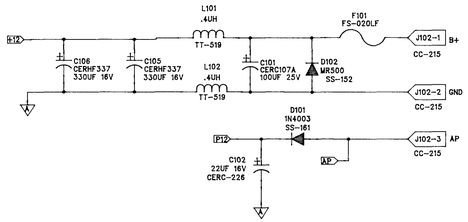

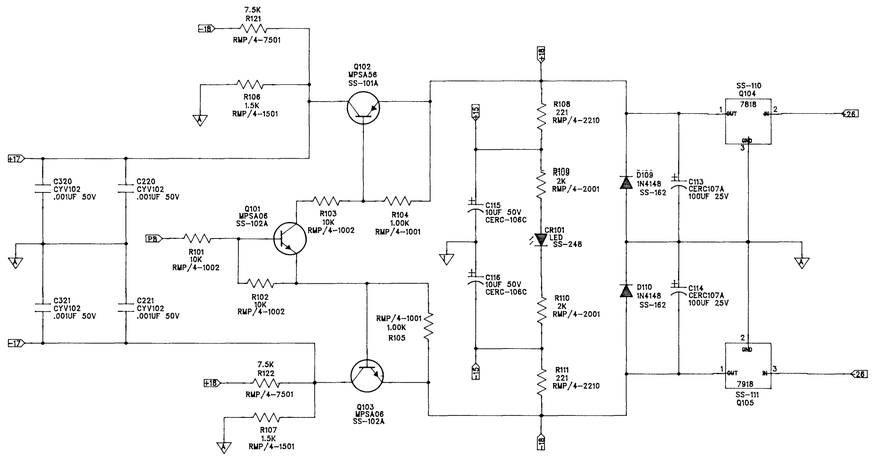

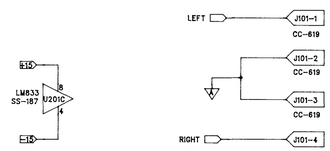

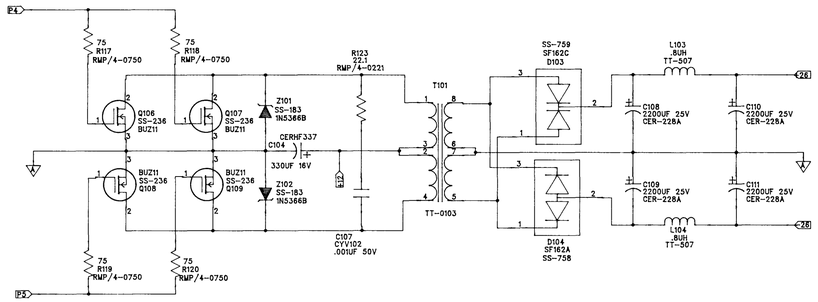

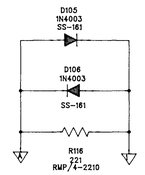

CONFIDENTIAL

© Copyright 19 91 Rockford Corporation. This drawing is the property of Rockford Corporation and embodies confidential information, trade secret information, and/or know-how which is the property of Rockford Corporation. By accepting this drawing, the recipient agrees not to provide, or otherwise make available, the drawing, or any information or know-how embodied therein, to any third party without prior written authorization.

CORRECTIONS	Z	SYM	CHANGE	BY	DA

DWN	ROCHELEAU	10/14/91	ROCKFORD FOSGATE CORPORATION DIVISION TEMPE AZ
CHK			
ENGR	ROCHELEAU	10/14/91	TITLE: MSE100 POWER SUPPLY
APVD	G.R.	8/92	
APVD	LK	8/92	SIZE D / SCALE NONE / SHEET 1 OF 3
MATL/FS			FILE NAME: MSE100B / PART NO.: SCH-MSE100 / REV: C

Z	SYM	DA	REVISION RECORD	AUTHORITY	DRAW	CHECK
			RELEASED			

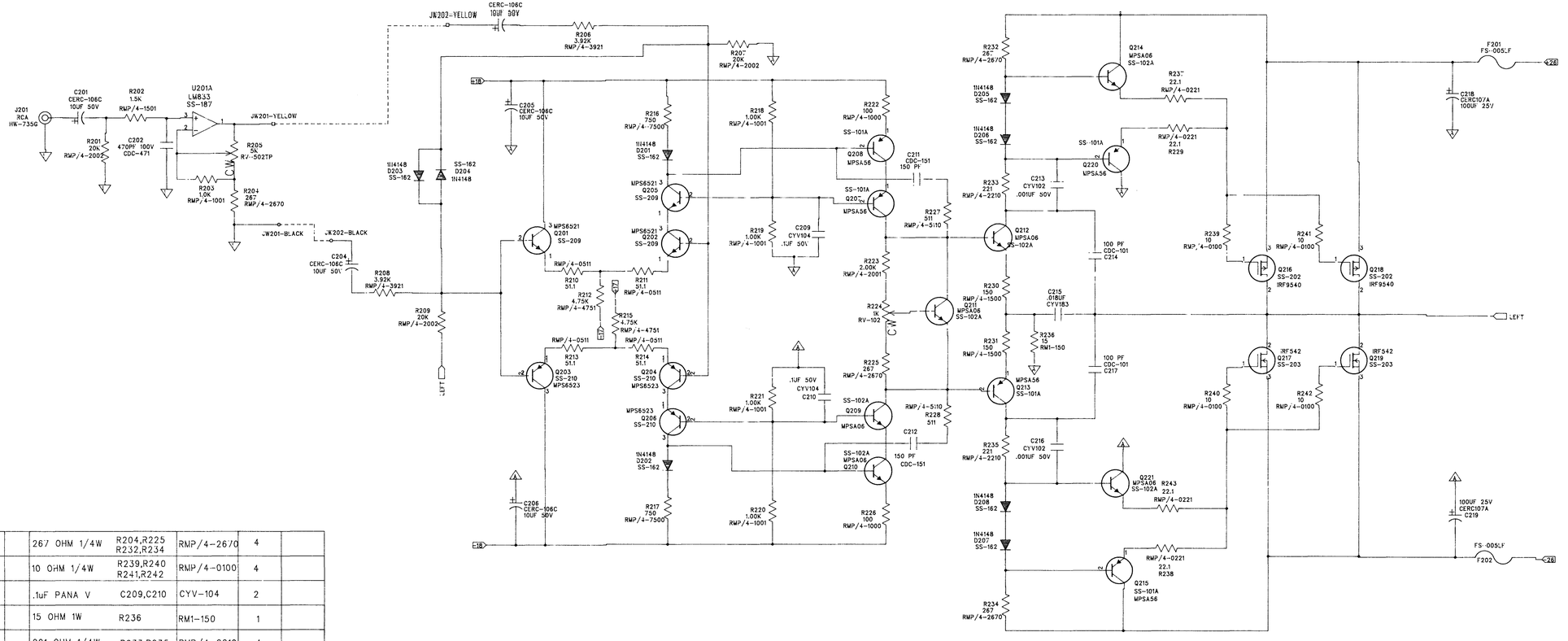

D	23			267 OHM 1/4W	R204,R225 R232,R234	RMP/4-2670	4
	22			10 OHM 1/4W	R239,R240 R241,R242	RMP/4-0100	4
	21			.1uF PANA V	C209,C210	CYV-104	2
C	20			15 OHM 1W	R236	RM1-150	1
	19			221 OHM 1/4W	R233,R235	RMP/4-2210	4
	18			100 pF DISC	C214,C217	CDC-101	2
	17			22.1 OHM 1/4W	R229,R237 R238,R243	RMP/4-0221	4
	16			511 OHM 1/4W	R227,R228	RMP/4-5110	2
B	15			150 pF DISC	C211,C212	CDC-151	2
	14			1N4148	D201,D202,D203 D204,D205,D206 D207,D208	SS-162	8
	13			MPS6523	Q203,Q204 Q206	SS-210	3
	12			MPS6521	Q201,Q202 Q205	SS-209	3
	11			MPSA06	Q209,Q210,Q211 Q212,Q214,Q221	SS-102A	6
A	10			MPSA56	Q207,Q208,Q213 Q215,Q220	SS-101A	5
	9			470 pF DISC	C202	CDC-471	1
	8			.001 uf PANA V	C213,C216	CYV-102	2
	7			1K OHM POT	R224	RV-102	1
	6			5K OHM POT	R205	RV-502TP	1

	35			4.75K OHM 1/4W	R212,R215	RMP/4-4751	2
	34			100 OHM 1/4W	R222,R226	RMP/4-1000	2
	33			3.92K OHM 1/4W	R206,R208	RMP/4-3921	2
	32			.018 uF PANA V	C215	CYV-183	1
	31			1.5K OHM 1/4W	R202	RMP/4-1501	1
	30			2.0K OHM 1/4W	R223	RMP/4-2001	1
	29			20K OHM 1/4W	R201,R207 R209	RMP/4-2002	3
	28			1.0K OHM 1/4W	R203,R218,R219 R220,R221	RMP/4-1001	5
	27			51.1 OHM 1/4W	R210,R211 R213,R214	RMP/4-0511	4
	26			750 OHM 1/4W	R216,R217	RMP/4-7500	2
	25			IRF542	Q217,Q219	SS-203T	2
	24			IRF9540	Q216,Q218	SS-202T	2

	41						
	40						
	39						
	38						
	37						
	36			150 OHM 1/4W	R230,R231	RMP/4-1500	2

	5			LM833	U201	SS-187	1
	4			100 uF 25V	C218,C219	CERC-107A	2
	3			5 AMP BLADE FUSE	F201,F202	FS-005LF	2
	2			10 uF 50V	C201,C203,C204 C205,C206	CERC-106C	5
	1			RCA	J201	HW-735G	1
	NO.	LV		DESCRIPTION & REF DES		PART NO.	QTY

CONFIDENTIAL

© Copyright 19 91 Rockford Corporation. This drawing is the property of Rockford Corporation and embodies confidential information, trade secret information, and/or know-how which is the property of Rockford Corporation. By accepting this drawing, the recipient agrees not to provide, or otherwise make available, the drawing, or any information or know-how embodied therein, to any third party without prior written authorization

						DA		
						BY		
						CHANGE		
						SYM		
						CORRECTIONS		

DWN	Rocheleau	10/14/91	ROCKFORD CORPORATION FOSGATE DIVISION TEMPE AZ
CHK			
ENGR	Rocheleau	10/14/91	TITLE: MSE100 LEFT CHANNEL
APVD	G.K.	5/6/92	
APVD	UK	5/6/92	SIZE D / SCALE NONE / SHEET 2 OF 3
MATL/FS			FILE NAME: MSE100 / PART NO.: SCH-MSE100 / REV: C

REV C | FILE NAME MSE100 | PART NO. SCH-MSE100

Z	SYM	DA	REVISION RECORD	AUTHORITY	DRAW	CHECK
			RELEASED			

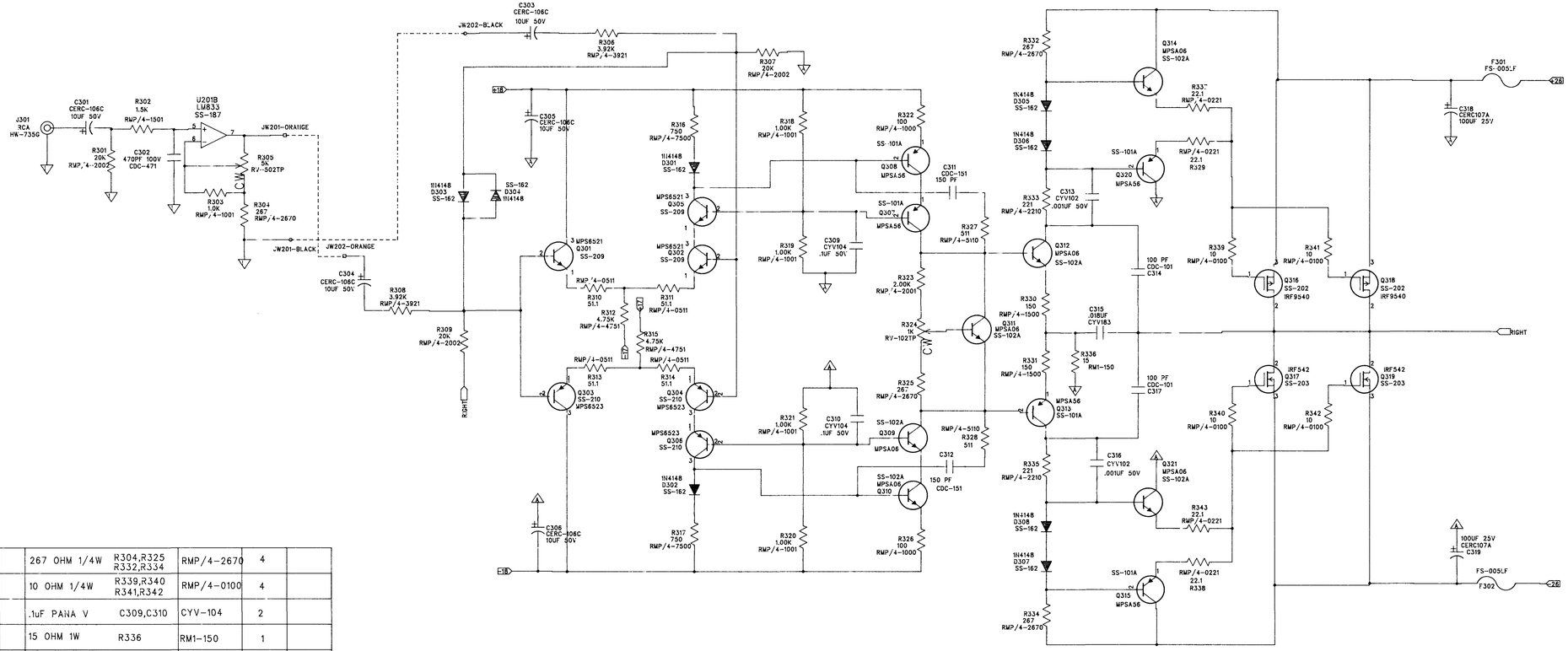

D	23			267 OHM 1/4W	R304,R325 R332,R334	RMP/4-2670	4		35			4.75K OHM 1/4W	R312,R315	RMP/4-4751	2		41						
	22			10 OHM 1/4W	R339,R340 R341,R342	RMP/4-0100	4		34			100 OHM 1/4W	R322,R326	RMP/4-1000	2		40						
	21			.1uF PANA V	C309,C310	CYV-104	2		33			3.92K OHM 1/4W	R306,R308	RMP/4-3921	2		39						
C	20			15 OHM 1W	R336	RM1-150	1		32			.018 uF PANA V	C315	CYV-183	1		38						
	19			221 OHM 1/4W	R333,R335	RMP/4-2210	2		31			1.5K OHM 1/4W	R302	RMP/4-1501	1		37						
	18			100 pF DISC	C314,C317	CDC-101	2		30			2.0K OHM 1/4W	R323	RMP/4-2001	1		36			150 OHM 1/4W	R330,R331	RMP/4-1500	2
	17			22.1 OHM 1/4W	R329,R337 R338,R343	RMP/4-0221	4		29			20K OHM 1/4W	R301,R307 R309	RMP/4-2002	3								
	16			511 OHM 1/4W	R327,R328	RMP/4-5110	2		28			1.0K OHM 1/4W	R303,R318,R319 R320,R321	RMP/4-1001	5								
B	15			150 pF DISC	C311,C312	CDC-151	2		27			51.1 OHM 1/4W	R310,R311 R313,R314	RMP/4-0511	4								
	14			1N4148	D301,D302,D303 D304,D305,D306 D307,D308	SS-162	8		26			750 OHM 1/4W	R316,R317	RMP/4-7500	2								
	13			MPS6523	Q303,Q304 Q306	SS-210	3		25			IRF542	Q317,Q319	SS-203T	2								
	12			MPS6521	Q301,Q302 Q305	SS-209	3		24			IRF9540	Q316,Q318	SS-202T	2								
	11			MPSA06	Q309,Q310,Q311 Q312,Q314,Q321	SS-102A	6																
A	10			MPSA56	Q307,Q308,Q313 Q315,Q320	SS-101A	5																
	9			470 pF DISC	C302	CDC-471	1																
	8			.001 uF PANA V	C313,C316	CYV-102	2																
	7			1K OHM POT	R324	RV-102	1																
	6			5K OHM POT	R305	RV-502TP	1																

NO.	LV		DESCRIPTION & REF DES	PART NO.	QTY	COMMENT
5			LM833 U201	SS-187	1	
4			100 uF 25V C318,C319	CERC-107A	2	
3			5 AMP BLADE FUSE F301,F302	FS-005LF	2	
2			10 uF 50V C301,C303,C304 C305,C306	CERC-106C	5	
1			RCA J301	HW-735G	1	

CONFIDENTIAL

© Copyright 19 91 Rockford Corporation. This drawing is the property of Rockford Corporation and embodies confidential information, trade secret information, and/or know-how which is the property of Rockford Corporation. By accepting this drawing, the recipient agrees not to provide, or otherwise make available, the drawing, or any information or know-how embodied therein, to any third party without prior written authorization.

Z	SYM	CHANGE	BY	DA

CORRECTIONS

DWN	Rocheleau	10/14/91	ROCKFORD FOSGATE CORPORATION DIVISION TEMPE AZ
CHK			
ENGR	Rocheleau	10/14/91	TITLE: MSE100 RIGHT CHANNEL
APVD	[illegible]	8/92	
APVD	[illegible]	5/92	SIZE D | SCALE NONE | SHEET 3 OF 3
MATL/FS			FILE NAME: MSE100 | PART NO.: SCH-MSE100 | REV: C

REV C | MSE100 | FILE NAME | SCH-MSE100 | PART NO.